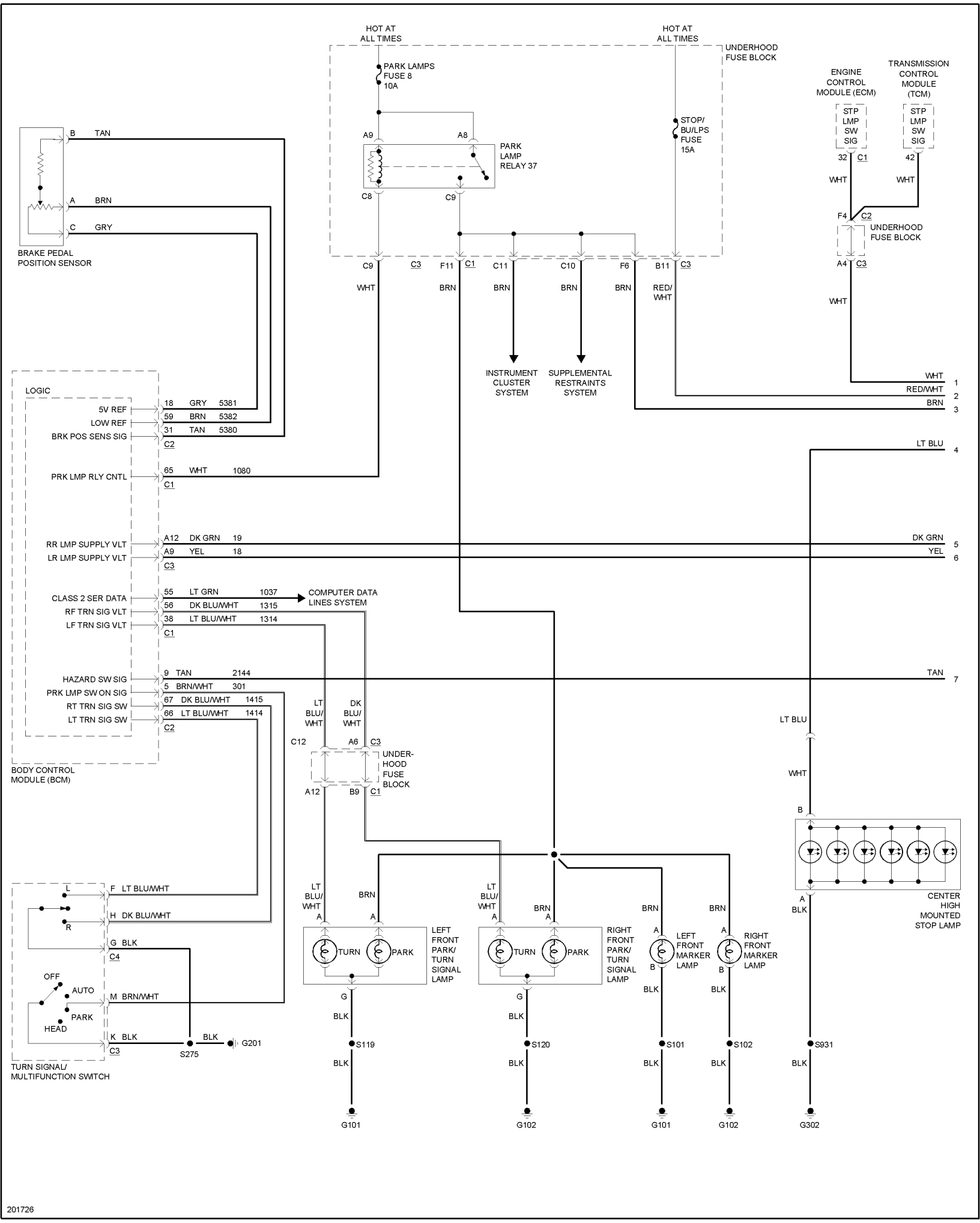
HOT AT ALL TIMES
HOT AT ALL TIMES
UNDERHOOD FUSE BLOCK
PARK LAMPS FUSE 8 10A
STOP/ BU/LPS FUSE 15A
PARK LAMP RELAY 37
A9
A8
C8
C9
ENGINE CONTROL MODULE (ECM)
TRANSMISSION CONTROL MODULE (TCM)
STP LMP SW SIG
STP LMP SW SIG
32 C1
42
WHT
WHT
F4 C2
UNDERHOOD FUSE BLOCK
A4 C3
WHT
B TAN
A BRN
C GRY
BRAKE PEDAL POSITION SENSOR
C9 C3
F11 C1
C11
C10
F6
B11 C3
WHT
BRN
BRN
BRN
BRN
RED/ WHT
INSTRUMENT CLUSTER SYSTEM
SUPPLEMENTAL RESTRAINTS SYSTEM
WHT 1
RED/WHT 2
BRN 3
LOGIC
5V REF
LOW REF
BRK POS SENS SIG
PRK LMP RLY CNTL
18 GRY 5381
59 BRN 5382
31 TAN 5380
C2
65 WHT 1080
C1
LT BLU 4
RR LMP SUPPLY VLT
LR LMP SUPPLY VLT
A12 DK GRN 19
A9 YEL 18
C3
DK GRN 5
YEL 6
CLASS 2 SER DATA
RF TRN SIG VLT
LF TRN SIG VLT
55 LT GRN 1037
56 DK BLU/WHT 1315
38 LT BLU/WHT 1314
C1
COMPUTER DATA LINES SYSTEM
HAZARD SW SIG
PRK LMP SW ON SIG
RT TRN SIG SW
LT TRN SIG SW
9 TAN 2144
5 BRN/WHT 301
67 DK BLU/WHT 1415
66 LT BLU/WHT 1414
C2
TAN 7
BODY CONTROL MODULE (BCM)
LT BLU/ WHT
DK BLU/ WHT
C12
A6 C3
UNDER-HOOD FUSE BLOCK
A12
B9 C1
LT BLU
WHT
B
A
BLK
CENTER HIGH MOUNTED STOP LAMP
L
R
F LT BLU/WHT
H DK BLU/WHT
G BLK
C4
OFF
AUTO
PARK
HEAD
M BRN/WHT
K BLK
C3
BLK
S275
G201
TURN SIGNAL/ MULTIFUNCTION SWITCH
LT BLU/ WHT
BRN
A
TURN
PARK
LEFT FRONT PARK/ TURN SIGNAL LAMP
LT BLU/ WHT
BRN
RIGHT FRONT PARK/ TURN SIGNAL LAMP
BRN
LEFT FRONT MARKER LAMP
BRN
RIGHT FRONT MARKER LAMP
B
G
BLK
S119
S120
S101
S102
S931
G101
G102
G101
G102
G302

201726