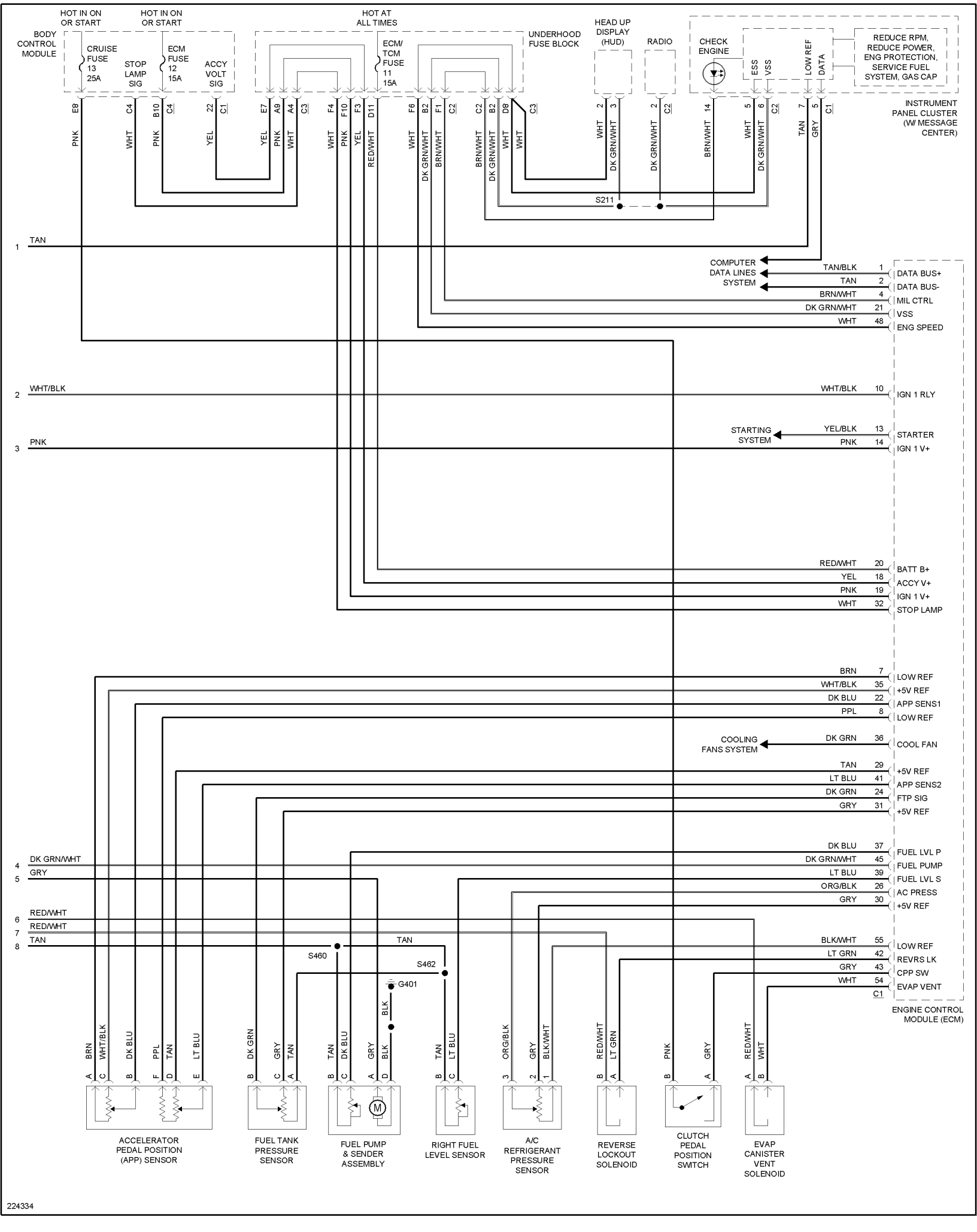
HOT IN ON OR START
HOT IN ON OR START
HOT AT ALL TIMES
BODY CONTROL MODULE
CRUISE FUSE 13 25A
STOP LAMP SIG
ECM FUSE 12 15A
ACCY VOLT SIG
ECM/ TCM FUSE 11 15A
UNDERHOOD FUSE BLOCK
HEAD UP DISPLAY (HUD)
RADIO
CHECK ENGINE
ESS
VSS
LOW REF
DATA
REDUCE RPM, REDUCE POWER, ENG PROTECTION, SERVICE FUEL SYSTEM, GAS CAP
INSTRUMENT PANEL CLUSTER (W/ MESSAGE CENTER)
S211
COMPUTER DATA LINES SYSTEM
TAN/BLK 1 DATA BUS+
TAN 2 DATA BUS-
BRN/WHT 4 MIL CTRL
DK GRN/WHT 21 VSS
WHT 48 ENG SPEED
WHT/BLK 10 IGN 1 RLY
STARTING SYSTEM
YEL/BLK 13 STARTER
PNK 14 IGN 1 V+
RED/WHT 20 BATT B+
YEL 18 ACCY V+
PNK 19 IGN 1 V+
WHT 32 STOP LAMP
BRN 7 LOW REF
WHT/BLK 35 +5V REF
DK BLU 22 APP SENS1
PPL 8 LOW REF
COOLING FANS SYSTEM
DK GRN 36 COOL FAN
TAN 29 +5V REF
LT BLU 41 APP SENS2
DK GRN 24 FTP SIG
GRY 31 +5V REF
DK BLU 37 FUEL LVL P
DK GRN/WHT 45 FUEL PUMP
LT BLU 39 FUEL LVL S
ORG/BLK 26 AC PRESS
GRY 30 +5V REF
BLK/WHT 55 LOW REF
LT GRN 42 REVRS LK
GRY 43 CPP SW
WHT 54 EVAP VENT
C1
ENGINE CONTROL MODULE (ECM)
S460
S462
G401
ACCELERATOR PEDAL POSITION (APP) SENSOR
FUEL TANK PRESSURE SENSOR
FUEL PUMP & SENDER ASSEMBLY
RIGHT FUEL LEVEL SENSOR
A/C REFRIGERANT PRESSURE SENSOR
REVERSE LOCKOUT SOLENOID
CLUTCH PEDAL POSITION SWITCH
EVAP CANISTER VENT SOLENOID
224334