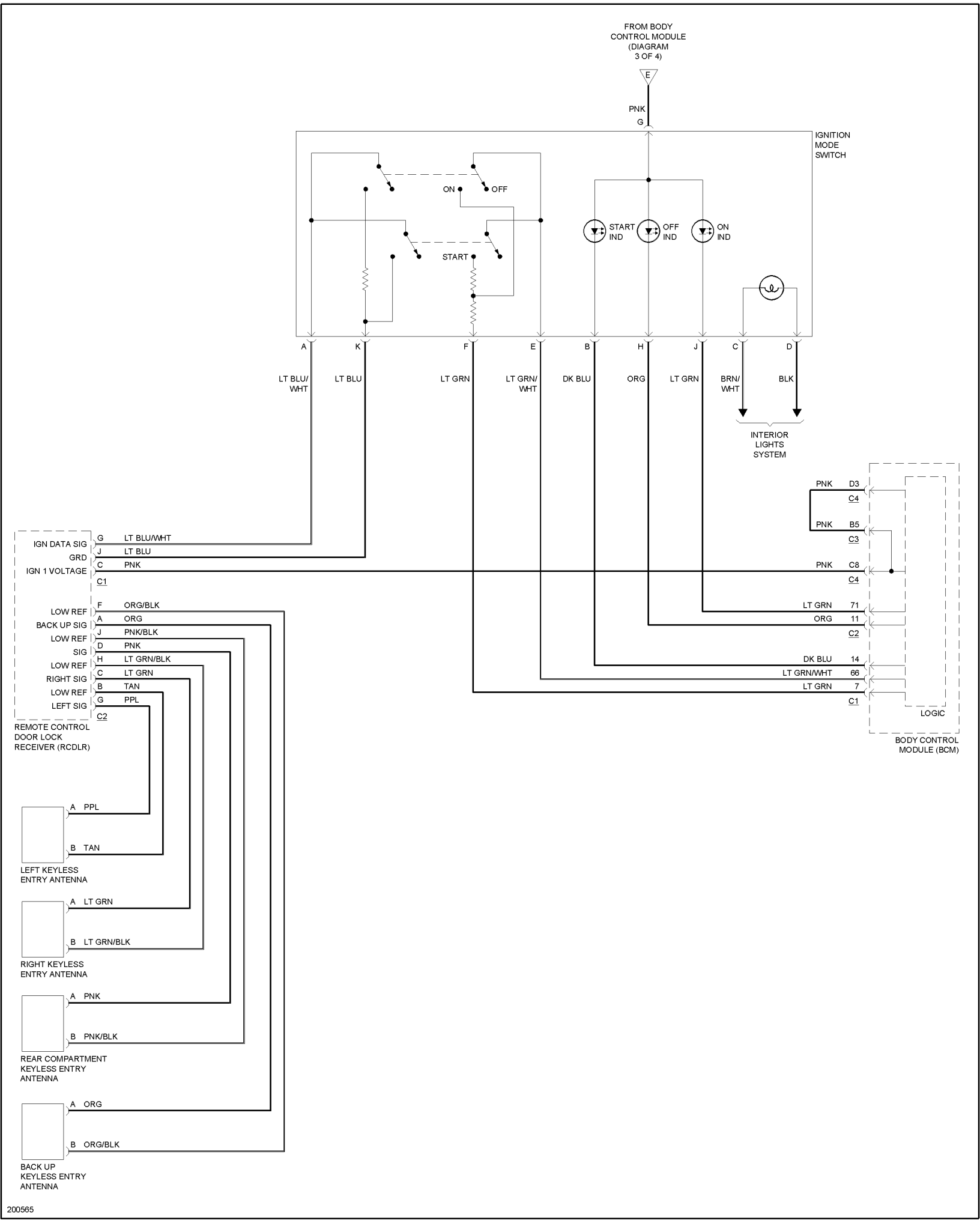
FROM BODY CONTROL MODULE (DIAGRAM 3 OF 4)
E
PNK
G
IGNITION MODE SWITCH
ON
OFF
START
START IND
OFF IND
ON IND
A
K
F
E
B
H
J
C
D
LT BLU/ WHT
LT BLU
LT GRN
LT GRN/ WHT
DK BLU
ORG
LT GRN
BRN/ WHT
BLK
INTERIOR LIGHTS SYSTEM
PNK D3
C4
PNK B5
C3
PNK C8
C4
LT GRN 71
ORG 11
C2
DK BLU 14
LT GRN/WHT 66
LT GRN 7
C1
LOGIC
BODY CONTROL MODULE (BCM)
IGN DATA SIG G LT BLU/WHT
GRD J LT BLU
IGN 1 VOLTAGE C PNK
C1
LOW REF F ORG/BLK
BACK UP SIG A ORG
LOW REF J PNK/BLK
SIG D PNK
LOW REF H LT GRN/BLK
RIGHT SIG C LT GRN
LOW REF B TAN
LEFT SIG G PPL
C2
REMOTE CONTROL DOOR LOCK RECEIVER (RCDLR)
A PPL
B TAN
LEFT KEYLESS ENTRY ANTENNA
A LT GRN
B LT GRN/BLK
RIGHT KEYLESS ENTRY ANTENNA
A PNK
B PNK/BLK
REAR COMPARTMENT KEYLESS ENTRY ANTENNA
A ORG
B ORG/BLK
BACK UP KEYLESS ENTRY ANTENNA
200565